Panasonic®

D-3 1/2" DIGITAL

Tape Evaluator

Model AJ - EV300p

Operating Instructions

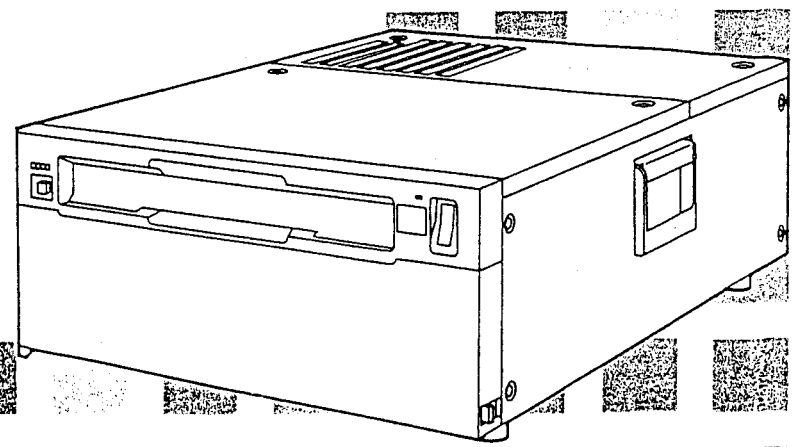

Precautions for Use (USA and Canada)

Since this VTR is designed for metal tapes only, make sure that only the designated tapes are used. An ordinary VHS tape cannot be used. Removal of the covers on electrical appliances for maintenance purposes may lead to electric shocks.
Personnel should therefore adhere strictly to the normal safety precautions.
Some customer-preference switches are located on printed circuit boards within the unit. Be sure to turn off the power prior to opening the unit, before changing the position of any switch, and especially before removing or reinserting any circuit board.

FCC NOTE:
This device complies with Part 15 of the FCC Rules. To assure continued compliance follow the attached installation instructions and do not make any unauthorized modifications.

This equipment has been tested and found to comply with the limits for a Class A digital device, pursuant to Part 15 of the FCC Rules. These limits are designed to provide reasonable protection against harmful interference when the equipment is operated in a commercial environment. This equipment generates, uses, and can radiate radio frequency energy and, if not installed and used in accordance with the instruction manual, may cause harmful interference to radio communications. Operation of this equipment in a residential area is likely to cause harmful interference in which case the user will be required to correct the interference at his own expense.

CAUTION:
TO REDUCE THE RISK OF FIRE OR SHOCK HAZARD AND ANNOYING INTERFERENCE, USE THE RECOMMENDED ACCESSORIES ONLY.

WARNING: TO REDUCE THE RISK OF FIRE OR SHOCK HAZARD, DO NOT EXPOSE THIS EQUIPMENT TO RAIN OR MOISTURE.

CANADA ONLY/ CANADA SEULEMENT

CAUTION
This digital apparatus does not exceed the Class A limits for radio noise emissions from digital apparatus set out in the Radio Interference Regulations of the Canadian Department of Communications.

ATTENTION
L'interférence radioélectrique générée par cet appareil numérique de type A ne dépasse pas les limites énoncées dans le Règlement sur les perturbations radioélectriques, section appareil numérique, du Ministère des Communications.

is the safety information.

Contents

Chapter 1 General outline

1-1. General outline 7

1-2. Main features 7

1-3. Main functions 8

1-4. Tests and measurements conducted by tape evaluator 9

1-5. Configuration of tape evaluator functions 10

Chapter 2 Preparations for operation and names of the parts

2-1. Front panel and rear panel sections 11

2-2. Connection with a personal computer and peripheral 12

2-3. Starting the system 13

2-4. Description and operation of screen facilities 14

Chapter 3 Evaluate/cleaning execution (operations and procedures)

3-1. Full evaluate execution and displays 17

3-2. Local evaluate execution 19

3-3. Full cleaning execution 19

3-4. Local cleaning execution 20

3-5. Forward, fast forward, rewind, stop and ready 20

3-6. Remaining cleaning ribbon life display 20

3-7. Operating precautions for evaluate execution and during actual execution 20

Chapter 4 Function menus

4-1. Types of evaluate execution screen menus 21

4-1-1. Entering a cassette name 22

4-1-2. How to enter and update a cassette name and number 22

4-2. Enlarging and contracting the view menu display scree 23

4-3. Entering, saving, loading and processing file menu dat 23

4-3-1. DATA SAVE menu 24

4-3-2. SUMMARY menu 24

4-4. Printing out the print menu data 27

4-5. System menus 28

4-5-1. Selecting SORT ON/OFF 28

4-5-2. Selecting the USER PRESET menu 29

A USER PRESET setting items 29

B USER PRESET operations 30

C Selecting WAVE FORM OUT 31

D How to replace the cleaning ribbons 31

4-5-3. Selecting the MODE SELECT menu 33

4-5-4. Selecting the RF AUTO SETUP menu 34

4-5-5. Selecting the TEST menu 36

4-5-6. Selecting the SYSTEM QUIT menu 36

Chapter 5 Inspections

5-1. Cleaning the cylinder and transport system 37

5-2. Replacing the cleaning ribbons 37

5-3. Checking RF AUTO SETUP 37

Chapter 6 Circuit board switches

Circuit board switches 38

Chapter 7 Error messages

Error messages 39

Chapter 8 Specifications

Specifications 41

Precautions

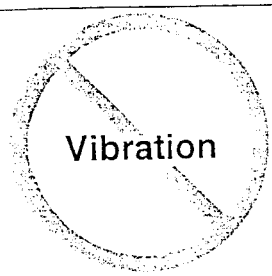

Do not use the VTR in a location subjected to a great deal of vibration.

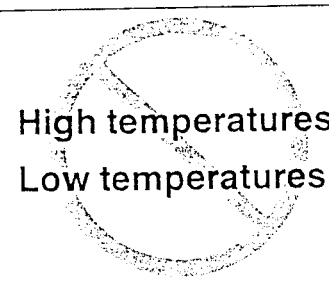

Use the VTR at temperatures ranging from 41°F to 104°F (5°C to 40°C).
Do not use it outside this range.

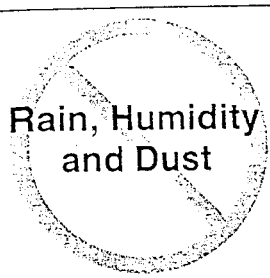

Do not use the VTR in the rain, at high humidity levels and in extremely dusty locations.

Do not drop the VTR or subject it to strong impact.

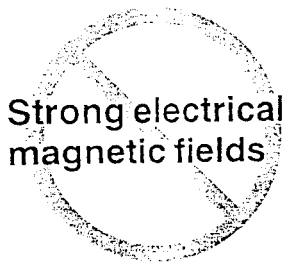

Using the VTR in extremely strong electrical or magnetic fields may result in a deterioration in the picture and sound quality.

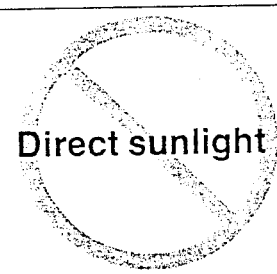

Do not use the VTR where it will be exposed to direct sunlight for long periods of time.

Operating precautions

Power supply

- Use a supply voltage that conforms to the rating.
- Be sure to take hold of the power plug (and not the cable) when connecting and disconnecting the recorder.
- Do not run the power cable near a heating appliance.
- Do not place heavy objects on top of the power cable.
- Do not tamper with the power cable in any way.

When trouble occurs:

- When trouble occurs, immediately contact your authorized service personnel.

Auto OFF function

- When trouble occurs in the VTR and continued operation is not possible without remedial action, the AUTO OFF lamp on the VTR's front panel light, and the VTR stops operating.
  If the power is turned off or on in this state, the tape may be damaged.
- Check the transport status of the tape. If it has become disengaged from the transport system, remove the tape either manually or using the optional emergency ejector unit. Normal operation can sometimes be restored when the power is turned off and on again.
- Repairs are necessary if the AUTO OFF status is not released even when the power is turned off and back on again. Set the power switch to the OFF position immediately, disconnect the power plug from the power outlet, and contact your authorized service personnel.
- If the AUTO OFF function has ever been activated, contact your authorized service personnel regardless of whether normal operation was restored.

Tips for safe handling

- Do not insert or remove circuit boards or handle the leads with the power still ON.
- Bear in mind that you might be burned if you touch heavy-load parts or overheated areas.
- Bear in mind that some areas inside the VTR have a high voltage.
- There are times when the danger of electric shocks is present even after the power has been switched off. In particular, take care with the capacitors.
- Do not insert or poke foreign objects through the cassette slot or any other openings in the main unit.

Transporting the VTR

- Each circuit board block of this VTR is provided with a clamping device to prevent the circuit board from popping out. Be sure to screw them in place especially when transporting the VTR.

Chapter 1 General outline

1-1. General outline

The model AJ-EV300 is a tape evaluator for D-3 and D-5 format tapes.
With the objective of enabling VTR users to recycle their tapes for further use, this unit is designed to provide high-speed evaluation to check whether tapes still have a specific standard of quality and to detect at an early stage whether tapes have any defects. In this way, the unit helps to improve the tape usage efficiency.
The unit thus makes it easy for users to maintain the quality standards of their tapes and ensure high picture quality for the D-3 and D-5 format digital tapes.

1-2. Main features

1) This tape evaluator is used for D-3 and D-5 format half-inch digital tapes.

2) Tapes can be evaluated at 10 times normal tape speed (or 5 times normal tape speed for D-5 format tapes).

3) Evaluation functions
   1. Detection and assessment of helical track dropouts
   2. Optical detection of damage, creasing and marks near top and bottom edges of tape
   3. Detection of linear track level fluctuations
   4. Display at unit time intervals (1 sec, 6 sec)
   5. Display of summary of evaluation results
   6. Measurement of tape length

4) Tapes are cleaned while they are being evaluated.

5) A paper ribbon feed system which treats cassette tapes gently is used to clean the tapes.

6) The magnetic surface and base of the cassette tape are cleaned separately.

7) The cleaning mode for executing tape cleaning only without evaluation can also be selected.

8) Using a personal computer, data can be displayed and saved, and saved data can be loaded and displayed.

9) Summary data can be compiled for the saved data.

10) The summary data can be sorted and retrieved.

11) Data can be printed out.

12) The type of data printout can be selected in line with the intended application.

1-3. Main functions

Tape evaluation functions

Full evaluate: The tape is rewound to its start and evaluated at 10 times the normal tape speed from the tape start to the deceleration zone at its end, and once the tape has traveled to its end, the tape is rewound to its start.

Local evaluate: The tape is evaluated starting at any position on the tape.

Cleaning functions

Full cleaning: The tape is rewound to its start and cleaned from the tape start to its end, and once the tape has traveled to its end, the tape is rewound.

Local cleaning: The tape is cleaned starting at any position on the tape.

Data filing functions

Data saving and loading : The data obtained as a result of evaluating and cleaning one tape is saved or loaded. The summary data of this data is saved.

Cassette retrieval: A necessary cassette can be retrieved from the summary data.

Tape number entry: Cassette numbers and names can be entered.

Printout functions

Hard copy: The data on the screen displaying the evaluation results can be printed out.

Total data copy: The data for one tape can be printed out in its entirety to include displays in the form of graphs and numeric values, summary data and sorted data.

Summary data copy: The summary data of a cassette can be printed out.

1-4. Tests and measurements conducted by tape evaluator

(1) **Helical dropout detection**
The D-3 or D-5 format tape is played back at the same time as it is recorded while helical scanning is performed. A D-3 tape is evaluated at 10 times the normal tape speed. The data obtained is displayed in the form of graphs and numeric values.

(2) **Detection of waviness using optical means**
The tape is tested for damage, creasing and waviness by detecting the number of variations and intervals of the changes in the light directed onto and reflected from the tape surface.
The results are displayed for each unit duration. Variations near the top and bottom edges of the tape are detected.

(3) **Detection of linear track fluctuations**
Marks and other defects near the top and bottom edges of a tape's linear tracks (cue and TC tracks) are detected. The tape is played back at the same time as it is recorded using a single signal, and the lengths of time during which the level fluctuations exceed a specific value are detected and displayed for each unit duration.

(4) **Confirmation of RF envelope level**
Signals are recorded on the helical tracks and played back at the same time, and the playback output signal level is monitored. It is also possible to monitor the playback output level of each of the heads.

(5) **Measurement of tape length**
The time corresponding to the actual length of the tape is measured when the full evaluate function is executed.

(6) **Identification of cassette type**
The cassette size, time corresponding to the tape length, and the tape type, whether D-3 or D-5, are identified.

The tape evaluator treats D-5 tapes as D-3 tapes. Whereas a D-3 tape is evaluated at 10 times the normal tape speed, a D-5 tape is, therefore, evaluated at 5 times the normal tape speed, and its tape time, present position display, position display time and total amount display are half of the actual figures.

1-5. Configuration of tape evaluator functions

Configuration of evaluator functions

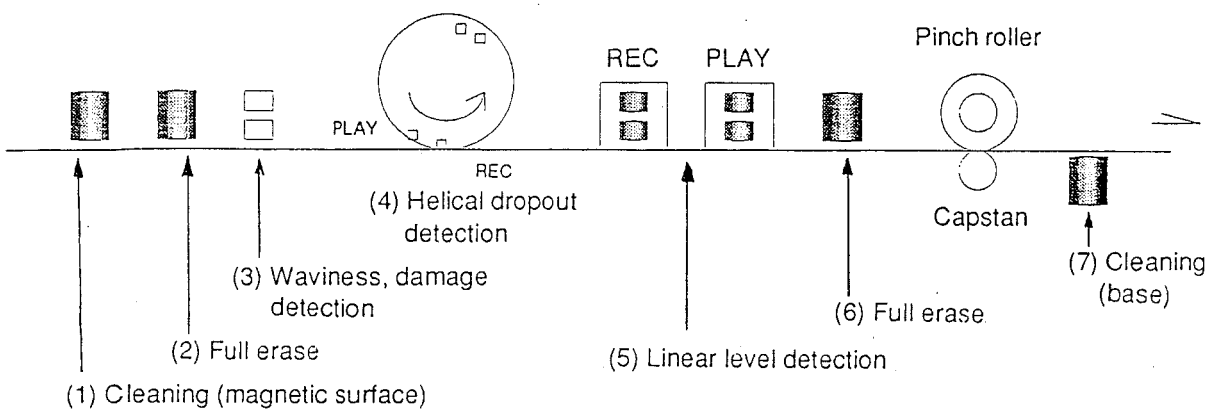

Operation of functions by mode

	(1) Cleaning (magnetic surface) (2) Full erase (3) Waviness, damage detection (4) Helical dropout detection (5) Linear level detection (6) Full erase (7) Cleaning (base)
During evaluation operation	1 → 2 → 3 → 4 → 5 → 6 → 7
During cleaning operation	1 ——→ 2 ——→ 3

During an evaluation operation, the magnetic surface is cleaned, all the tracks are erased, waviness is detected, helical dropouts are detected, the linear level is detected, and the base is cleaned at 10 times the normal tape speed.

During a cleaning operation, the magnetic surface is cleaned, waviness is detected, and the base is cleaned at 10 times the normal tape speed.

Chapter 2 Preparations for operation and names of the parts

2-1. Front panel sections

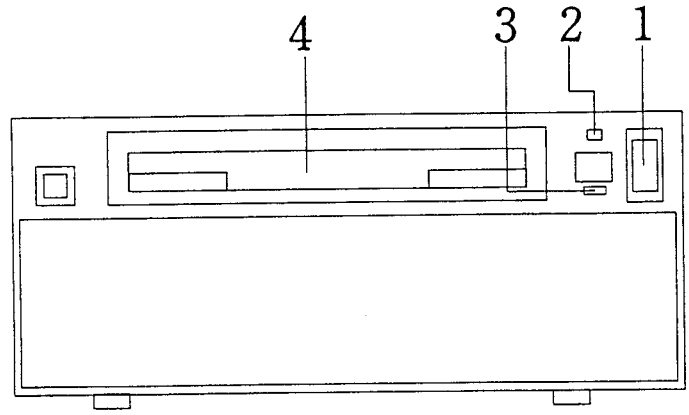

Power supply area

(1) POWER switch:
- When the ON end of this switch is pushed down, the power is switched on; when the OFF end is pushed down, the power is switched off.

(2) POWER lamp:
- This lights when the power is switched on.

(3) AUTO OFF lamp:
- This lights when trouble has occurred in the unit and operation can no longer be continued.
- A message number announcing the nature of the trouble appears on the display.

Cassette loading area

(4) Cassette holder:
- This is the slot through which the cassette tape is loaded. S, M and L cassettes can be used.

(5) Eject

Rear panel section

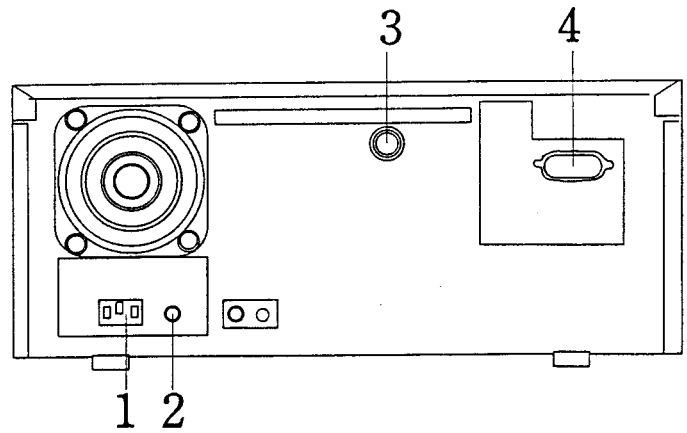

Power supply area

(1) AC input socket:
- This is connected to the power outlet using the power cable supplied with the unit.

(2) GND terminal:
- The unit must be grounded using this terminal when it is connected with other units.

(3) WFM OUT connector (BNC):
- This outputs signals to the waveform monitor.

(4) RS-232C:
- This is connected to the personal computer using the RS-232C crossover cable.

2-2. Connection with a personal computer and peripheral

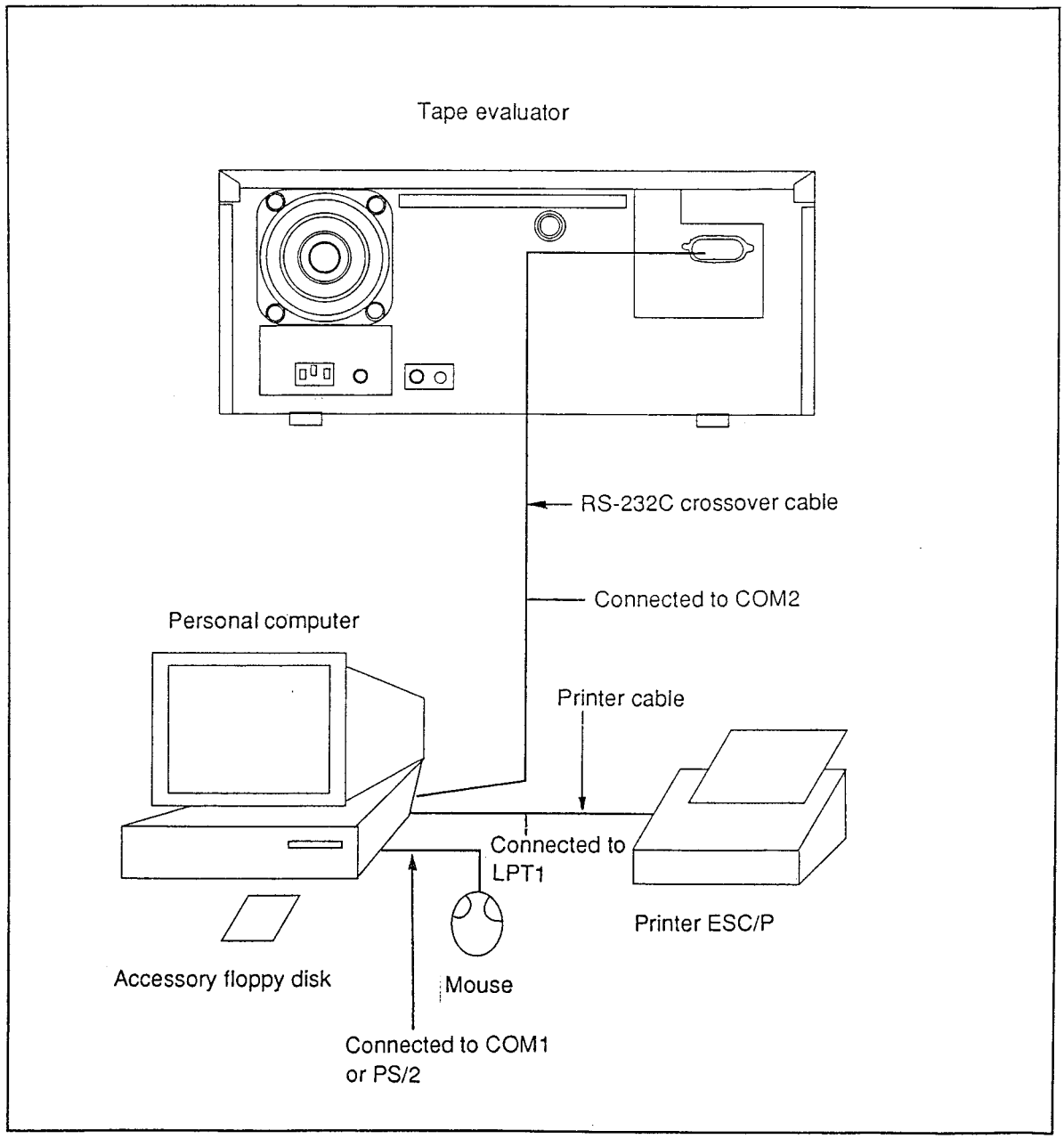

Connections

Evaluator and personal computer.....Use the RS-232C crossover cable, and connect to COM2.
Personal computer and mouse.....Connect to COM1 or PS/2.
Personal computer and printer .....Connect to LPT1.

2-3. Starting the system

1. Operating environment

(1) Usable personal computer:

- PC-AT or compatible machine (CPU 486 and up)
- VGA-compatible
  RS-232C and mouse capabilities required
  Printer (option): A supporting printer (ESC/P)

(2) Usable operating system

- MS-DOS-compatible, MS-DOS version 5.0 or higher
  Install an RS-232C driver, mouse driver and printer driver.
  Install PRINT.SYS and MOUSE.COM.
  Use what is supplied with MS-DOS version 5.0 or more sophisticated drivers.
- A conventional memory with at least 600 Kbytes or so is required when the evaluator program is run.
- The fonts used with the evaluator program differ from those indicated in the Operating Instructions.
- Before start-up, connect the equipment and turn on the power to all the units. Then proceed with the following start-up steps.

2. Start-up operation

Assign the floppy disk drive to start the program.
Enter as below if drive A is selected.

1. A: ⏎
2. A:\ ) EVA ⏎

If necessary:

The color screen can be started with EVA_-C.

After the start screen has been displayed for a short while, it will be replaced with the execution screen.

Assign one disk drive to run the evaluator program and another disk drive to store the data. (See 4-5-3.)

Start up the evaluator program after having created the directory in which the data is to be stored. After the program has been started up, designate the registration of the data directory on the MODE SELECT screen.

Start screen

```
DIGITAL TAPE
EVALUATE
```

◇ ◇ ◇ ◇ ◇

Version 1.0

2-4. Description and operation of screen facilities

Evaluate execution screen

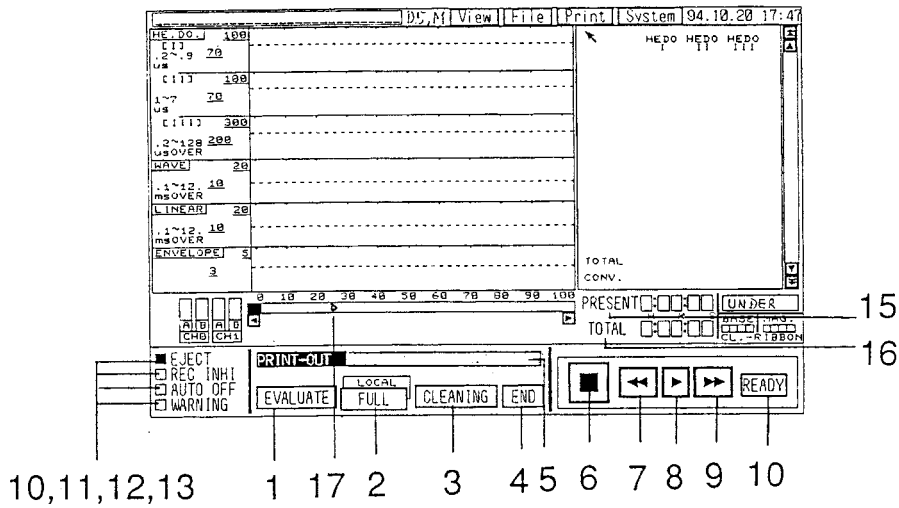

Description of screen facilities

(1) EVALUATE: ..... This is used to start the evaluate execution.
(2) FULL/LOCAL: ..... This is used to select the full or local mode.
(3) CLEANING: ..... This is used to start the cleaning operation.
(4) END: ..... This is used to stop the operation in progress.
(5) Operating mode/message display: ..... This displays the operating mode or message.
(6) STOP: ..... This is used to stop the operation in progress.
(7) REW: ..... This is used to rewind the tape.
(8) FOW: ..... This is used to forward the tape.
(9) FF: ..... This is used to fast forward the tape.
(10) READY: ..... This is used to ready the tape.
(11) Cassette EJECT display: ..... This lights when the tape has been ejected.
(12) Cassette REC INHI display: ..... This lights when the recording inhibit (accidental erasure prevention) setting has been established for the cassette.
(13) Deck AUTO OFF display: ..... This lights when a system error has occurred in the deck. (A message indicating the nature of the trouble appears in the display frame.)
(14) Deck/personal computer WARNING display: ..... This lights when a warning has been issued from the deck/personal computer.
(15) Present travel time: ..... This indicates the tape's present travel position in units of time.
(16) Total amount time: ..... This indicates the total amount of the tape in units of time.
(17) Travel display: ..... This indicates the tape's present travel position.

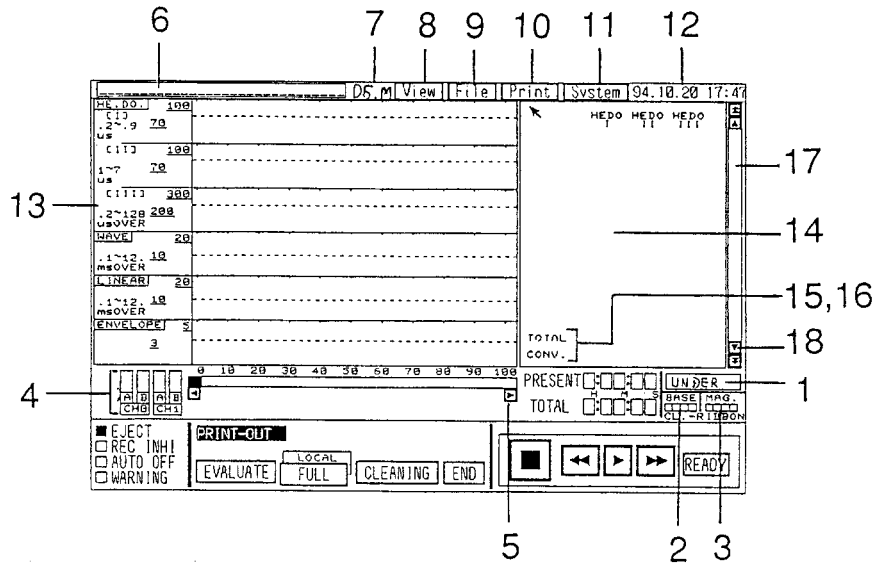

(1) Overall judgment display: ..... This indicates the overall judgment result of the evaluation performed.

(2) Remaining base ribbon life display (BASE): ..... This provides a rough indication of the remaining life of the cleaning ribbon (for the base).

(3) Remaining magnetic surface ribbon life display (MAG): ..... This provides a rough indication of the remaining life of the cleaning ribbon (for the magnetic surface).

(4) Envelope level indicators: ..... These indicate the envelope level of each channel head.

(5) Graph display range movement to left/right: ..... These move the display range of the graph showing the evaluation results to the left or right.

(6) Cassette name display frame: ..... This indicates the name and number of the cassette used.

(7) Cassette type display: ..... This indicates the format and type of the cassette used.

(8) View menu: ..... This is the menu for changing the axis representing the time in the graph displays.

(9) File menu: ..... This is the menu for entering, saving and loading the data.

(10) rint menu: ..... This is the menu for printing out data.

(11) System menu: ..... This is the menu for selecting the evaluator's operating mode.

(12) Date/time: ..... This indicates the present time.

(13) Graph display frame: ..... This displays the evaluator execution in the form of a graph. (Six types of data are displayed.)

(14) Numeric data display frame: ..... This displays the evaluator execution in the form of numeric data.

(15) TOTAL display frame: ..... This displays the average of the numeric data obtained from the evaluator execution.

(16) AVERAGE/CONVERSION (CONV.): .... This displays the averages of the numeric data. It also displays the dropout equivalent values.

(17) Numeric data position display: ..... This displays the position of the numeric data.

(18) Numeric data up/down scrolling: ..... These scroll the numeric data which are off the frame up or down.

Chapter 3 Evaluate/cleaning execution (operations and procedures)

1. Tape evaluation (with simultaneous tape cleaning)

(1) Full evaluate mode
(2) Local evaluate mode

2. Tape cleaning

(1) Full cleaning mode
(2) Local cleaning mode

3. Cassette tape travel and stop

(1) Forward
(2) Fast forward
(3) Rewind
(4) Stop
(5) Ready

3-1. Full evaluate execution and displays

Full evaluate execution

1. Install the cassette tape.

2. Click FULLI. (Normally, FULL is the default setting.)

3. Click EVALUATE.

4. Full evaluate execution now commences.

   - The tape is automatically rewound to its start.
   - Evaluation commences from the start at 10 times the normal tape speed.
   - The evaluation data is detected and displayed.
   - Detection is stopped when the cassette tape approaches its end and enters the deceleration zone.
   - At its end the tape is automatically rewound.
   - The tape is automatically rewound to its start.

5. Full evaluation is completed when the tape is rewound to its start.

Displays during full evaluate execution

1. While evaluation is executed, the screen shows graphs and numeric data on the basis of the data obtained and it indicates the tape travel.

2. Upon completion of evaluate execution, the numeric data is totalized, and either TOTAL, AVERAGE or CONVERSION appears. (See 1- (5) in section 4-5-2)

3. When the mode for obtaining the overall judgment has been selected, the result is displayed as OVER or UNDER.

4. Numeric data displays

   - During execution, the data is displayed in 4 digits (4321, for example).
     If the display exceeds 4 digits, "* * * *" appears. (For data processing, numeric values consisting of significant figures are used.)
   - The TOTAL value can be displayed in up to 6 digits.
     A value with up to 4 or 5 digits has 4 or 5 significant figures.
     A 6-digit figures is displayed as 6543#, for example, where "#" represents 10.
   - A 4-digit figure is displayed for AVERAGE. (Decimal places are rounded off.)
     A 4-digit figure is displayed for CONVERSION.

		Total value	What is displayed
Example	TOTAL	4321	appears as 4321
		54321	appears as 54321
		654321	appears as 6543#

- This notation also applies for figures printed out.

5. Evaluation displays of numeric data

- An asterisk (*) accompanies numeric data which exceeds the judgment value. A dot (•) accompanies numeric data which exceeds one-half of the judgment value.
- When the numeric data exceeds the judgment value (*) or one-half of it (•) for any item not included among the numeric value display items, the * or • is indicated at the right edge of the numeric data frame.

6. Time displays

- The total tape time and present travel time are indicated inside the display frame. Furthermore, the travel display appears underneath the graph.
- The total time during evaluation is calculated arithmetically. When evaluation is completed, the time calculated as tape travel time is displayed.
- Use the total amount time in the full evaluate mode to obtain a higher accuracy of the time directly from the cassette tape.
- The total amount tape time calculated in the full evaluate mode is held until before the rewind of the next evaluation starts.
- The tape travel display does not function when the tape position is outside the tape travel display frame time.

7. Envelope level display

- The envelope levels of the helical tracks are displayed in graph form. At the same time, the envelope levels of the simultaneous playback outputs for each channel are monitored in the bottom left display frame.

8. Other points

Measurement range of evaluate data

- Evaluate data is not measured for a 2-second period extending from the start of the tape. In addition, data is not measured in the deceleration zone near the tape end.

Automatic shutdown of evaluate execution

- Tape travel is automatically shut down when head clogging occurs.

3-2. Local evaluate execution

1. Install the cassette tape.

2. Click LOCAL.

3. Click EVALUATE.

4. Local evaluate execution now commences.

   • Local evaluation can be commenced from any position on the cassette tape.
   • Evaluation is performed at 10 times the normal tape speed.

5. Local evaluation is completed when END is clicked at the desired tape travel position.

   • The data obtained in the evaluate execution block is displayed on the screen in the form of graphs and numeric data.
   • The time used for local evaluation is obtained from the total amount time calculation. Therefore, its accuracy is determined by the accuracy of this calculation.
   • Use the full evaluate mode to calculate the more accurate time directly from the cassette tape.

3-3. Full cleaning execution

1. Install the cassette tape.

2. Click FULL.

3. Click CLEANING.

4. Full cleaning execution now commences.

   • The tape is automatically rewound to its start.
   • Cleaning commences from the start at 10 times the normal tape speed.
   • Detection is stopped when the cassette tape approaches its end and enters the deceleration zone.
   • At its end the tape is automatically rewound.
   • The tape is rewound to its start.
   • Only waviness is detected during cleaning.

5. Full cleaning is completed when the tape is rewound to its start.

   • The time used is calculated from the total amount time calculation. Therefore, its accuracy is based on the accuracy of this calculation.

3-4. Local cleaning execution

1. Install the cassette tape.

2. Click LOCAL.

3. Click EVALUATE.

4. Local cleaning execution now commences.

   • Local cleaning can be commenced from any position on the cassette tape.
   • Cleaning is performed at 10 times the normal tape speed.

5. Cleaning is completed when END is clicked at the desired tape travel position.

   • The data obtained in the cleaning execution block is displayed on the screen in the form of graphs and numeric data.

3-5. Forward, fast forward, rewind, stop and ready

Setting the cassette tape to forward, fast forward, rewind, stop or ready can be selected on the execution screen.

3-6. Remaining cleaning ribbon life display

1) • The remaining life of the cleaning ribbon is indicated on the display in accordance with the number of times the ribbon is used.
   • When the cleaning ribbon life comes to an end or when it is considered to have ended, the end display (red) appears, the deck discontinues the evaluate execution and cleaning execution and is shut down.

2) • When the remaining life display for the magnetic surface cleaning ribbon advances to the extent where it is considered to have ended, the cleaning ribbon end (red) sign appears.
   • When the remaining life display for the base cleaning ribbon is considered to have ended, the cleaning ribbon end (red) sign appears.

3-7. Operating precautions for evaluate execution and during actual execution

• It should be borne in mind that if a menu selection is made while evaluate execution or cleaning execution is in progress, then for the moments during which this selection is made the display data will stop, the values read will be incorrect, and the correct display will no longer be indicated.

• Do not perform EJECT while evaluate execution or cleaning execution is in progress. The operating mode or display may not be indicated properly.

• Operation cannot be transferred from a tape travel mode (◁◁ , ▷ , ▷▷ or READY) to evaluation or cleaning. Proceed with STOP or END first, and then transfer operation.

Chapter 4 Function menus

4-1. Types of evaluate execution screen menus

1. Functions and settings can be selected by selecting menus on the execution screen.

There is a choice between the view, file, print and system menus.
- On the **view** menu, the graph display horizontal axis ratio is changed.
- On the **file** menu, the evaluate data is saved and loaded.
- On the **print** menu, the evaluate data is printed out.
- On the **system** menu, the evaluator operations are set.

2. The cassette name can be entered in the top left frame. The type of cassette is displayed.

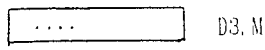

When the cassette name frame has been selected, the cassette name and number can be input by keys and entered using the return key.

NOTE:
When these execution screen menus are selected while evaluate execution is underway, priority is given to the menus while they are being selected, and the data is not displayed.
Furthermore, when a menu selection is canceled and a return is made to the original operation, the data during that period will be lost, and erroneous displays indicating incorrect values will appear.

4-1-1. Entering a cassette name

- Cassette names and numbers can be entered in the cassette name frame on the evaluate execution screen.
- When a cassette tape has been installed, the type and size of the cassette are automatically detected and indicated to the right of the cassette name frame.

1. Click the top left cassette name frame.
2. Key in the cassette name and number on the personal computer.
3. When the personal computer's return key is pressed, the cassette name and number are entered.

   - A cassette name can be entered before or after evaluate execution.
   - The summary data of a cassette name can be entered.
     When a cassette name is entered and DATA SAVE is clicked, the cassette name can be entered in the summary data.

4-1-2. How to enter and update a cassette name and number

1. When entering the first cassette after software startup

   (1) Click the cassette name frame.
   (2) Key in the cassette name and number to enter them.
   (3) Install the cassette tape in the deck.

   - The cassette type display appears in black and white.
   - The cassette name display frame appears in black and white.

   (4) Proceed with evaluate execution.

2. To update and enter the previous execution data display

   (1) When updating and entering a cassette name and number

   1) Click the cassette name frame.
   2) Key in the cassette name and number to enter them.
   3) Install the cassette tape in the deck.
      - The new cassette type appears in the cassette type display, and the display frame turns yellow prompting the operator to exercise caution.
      - The new cassette name is entered and displayed in the cassette name display frame.
   4) Proceed with evaluate execution.
   5) When evaluation is started, the cassette type is determined, and the display turns black and white.

   (2) When re-entering a cassette name unchanged

   1) Install the cassette tape in the deck.
      - The cassette type display shows the new cassette type in yellow.
      - The cassette name is displayed unchanged.
   2) Proceed with evaluate execution.
      - When tne cassette tape is ejected, the cassette name frame turns yellow and the cassette type flashes in yellow. The tape can be re-evaluated with the cassette name as is.
      - When another cassette is to be evaluated, the cassette type changes automatically when the new cassette is installed. Click the cassette name frame, and enter the new cassette name. The yellow display is cleared, and the black and white frame is restored.

4-2. Enlarging and contracting the view menu display screen

500.0 %

200.0 %

100.0 %

50.0 %

33.3 %

1. The scale ratio displayed can be changed on the view menu.

   - The unit of time for the dots used in the DOI, II, WAVE and LIN displays changes in accordance with the ratio set on the view menu. The displays appear as bar graphs.
   - Each of the dots used for the DOIII and ENVELOPE displays represents data for 6 seconds. Graphs of broken lines appear.
     - **"100%"** is the default setting. The horizontal axis is displayed as 100 minutes (D3). This is the basic display screen.
       Each dot displayed represents the data for every 2 seconds.
     - **500%:** With this setting, the horizontal axis across the width of the screen represents 20 minutes; and one dot represents the data of every second.
     - **200%:** With this setting, the horizontal axis across the width of the screen represents 50 minutes; one dot represents the data of every second.
     - **50%:** With this setting, the horizontal axis across the width of the screen represents 200 minutes; one dot represents the data of every 4 seconds.
     - **33.3%:** With this setting, the horizontal axis across the width of the screen represents 300 minutes; one dot represents the data of every 6 seconds.

2. The scale is moved to display evaluator data which exceeds the time displayed.
   - Upon completion of evaluation, graph data exceeding the display data time can be moved to any time position using [◁] and [▷] below the scale. The data is moved in the scale's units of time. The tape travel display is not moved in tandem.

4-3. Entering, saving, loading and processing file menu data

DATA SAVE

SUMMARY

1. DATA SAVE is the menu on which the evaluation result data is saved in the designated disk directory.
2. SUMMARY is the menu on which the the summary data files of cassette tape data are opened.
   (1) Summary data of the data saved can be viewed in tables.
   (2) Necessary cassette data can be re-displayed from summary data.
   (3) The summary data can be sorted.
   (4) The summary data can be deleted.
   (5) Summary data tables can be printed out.

4-3-1. DATA SAVE menu

1. Evaluation result data can be saved in the directory of the disk designated on the MODE SELECT menu. (See section 4-5-3)

2. Data can be saved by clicking the DATA SAVE menu after evaluate execution.

3. DATA SAVE data can be entered once only per evaluate execution result. The cassette name, etc. can be changed. (See section 4-3-2)

4-3-2. SUMMARY menu

1. The SUMMARY DATA screen appears when the SUMMARY menu is clicked.
   A table of the summary data appears on the screen.
   Summary data entry numbers are assigned automatically inside the personal computer as DATA No.

2. Cassette names entered in summary data can be changed.
   • Re-display the data with the cassette names to be changed from the summary data.
   • Re-enter the cassette name, and click DATA SAVE. The cassette name is now changed.

3. Details and uses of SUMMARY DATA menu displays

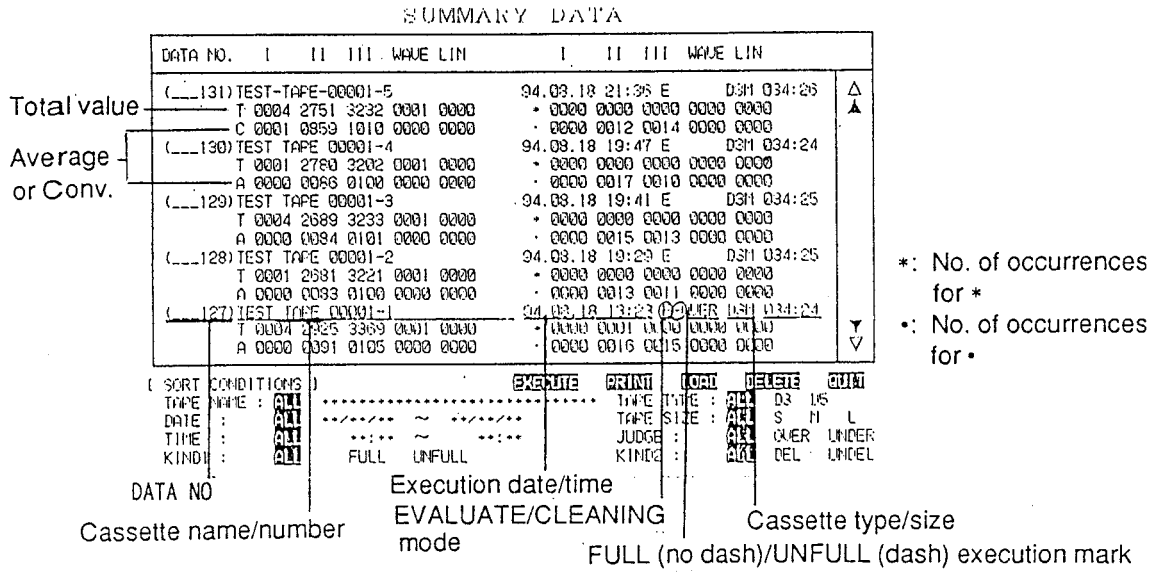

Summary data is displayed as a table on the summary data screen.

(1) Types and classifications of data displayed
The following details of the data are displayed in the table:

(A) DATA NO
Execution date/time
EVALUATE/CLEANING mode
Cassette type/size
Tape length
FULL/UNFULL

(B) Overall judgment OVER/UNDER
TOTAL data
AVERAGE or CONVERSION data
No. of occurrences

(C) Cassette name

- The data in (A) is fixed once when the data is saved, after which it cannot be changed.
- The data in (B) can be re-displayed and viewed by changing the USER PRESET conditions.
- The data in (C) can be changed by re-entering it on the execution screen.

(2) The data is displayed starting with the most recent data at the the top.

(3) Data strings can be forwarded.
Data strings can be moved using △ or ▽ on the right.
- The data is advanced or reversed one data at a time using △ or ▽ on the right.
- The data is advanced or reversed 5 data at a time using ⇧ or ⇩ on the right.

(4) **DATA NO:** This is the number of the data controlled inside the personal computer; it is displayed in up to 6 digits.
Cassette name/number: These can be entered by the user; up to 30 digits are displayed.
Execution date/time: This is the date (year/month/day) and time (hour) at which evaluate or cleaning was executed.
Execution mode indication: "E" for evaluate execution; "C" for the cleaning mode.
Full execution indication: no dash for FULL; "—" for UNFULL.
(This is indicated by the appearence or non-appearenceof the dash display when an ongoing local evaluate or full evaluate execution has been suspended.)
Overall judgment: Result of overall judgment selected by JUDGE (UNDER: no display; OVER: "OVER" display) is displayed.
Cassette type: Indicated as D3/D5, S, M or L
Tape time: Length of time of tape (hour or minute display can be selected).
T: The total values for DO I, DO II, DO III, WAVE and LINEAR are displayed.
A or C: AVERAGE or CONVERSION values are displayed.
- The number of * on the numeric data which the * , • , : , DO I, DO II, DO III, WAVE and LINEAR judgment values were exceeded are displayed.

4. Data retrieval from SUMMARY DATA

(1) The type of retrieval can be selected by SORT CONDITION.
Summary data can be sorted by setting the following as conditions:
KIND1 is the "full" mode selection information; KIND2 is the cassette data deletion information.

```
TAPETYPE        ALL  D3  D5
TAPE SIZE       ALL  S   M  L
JUDGE           ALL OVER UNDER
KIND1           ALL FULL UNFULL
KIND2           ALL DEL  UNDEL

TAPE  NAME       ************************ . . . . .
DATA             **/**/**    ~   **/**/**
TIME             **:**       ~   **:**
```

(2) The data is sorted when the above conditions are selected from the choices given above and set and when EXECUTE is clicked.
Example:
- To sort the D3 cassette tapes, click D3 using the mouse. When EXECUTE is clicked, D3 tapes alone are selected in the summary data.
- To select tape numbers 1, 2, 3, 4 and 5, click "* * * • • •" using the mouse. "* * * • • •" is now highlighted. Key in 1, 2, 3, 4 and 5 on the personal computer's keyboard and these numbers are designated when [↵] is pressed.
  When EXECUTE is clicked, these tape numbers are selected in the summary data.

(3) Data can be retrieved by designating any characters (a to z or A to Z) or numbers (0 to 9) in a tape name.

5. Re-display of data from summary data to execution screen

(1) When DATA No. in the summary data is clicked, DATA NO is highlighted. The cassette number of your choice can now be selected.
(2) Click LOAD.
Ensure that the cassette tape inside the deck has already been ejected by this time. Re-display is possible only in the eject mode.
(3) Operation automatically returns to the evaluate execution screen, and the data is re-displayed on the screen.
- Click LOAD while the selected DATA NO can be seen displayed on the summary data screen. Move the selected DATA NO using the screen △ and ▽. Data cannot be loaded while the data is not displayed on the screen.

(4) The re-display conditions are indicated below the existing USER PRESET display conditions.
- To re-process and enter summary data under the existing preset condition, first re-display the data and then click the DATA SAVE menu. Only the summary data can now be rewritten.

6. Deleting summary data

(1) When DATA NO on the summary data is clicked, DATA NO is highlighted, and the data number can be selected.
(2) When DELETE is clicked, the highlighted DATA NO flashes.
(3) When the highlighted and flashing DATA NO is clicked again, the display below DATA NO changes to DELETED, and the summary data deletion is enforced.
- Deleted data cannot be re-displayed.
- To cancel DELETE, click DELETE again or click another DATA NO in step (2).

7. Printing out summary data

(1) When PRINT on the SUMMARY DATA screen is clicked, the summary data is printed out from the printer output.
(2) Printing can be stopped by pressing the personal computer's space key while printing is in progress.

4-4. Printing out the print menu data

HARD COPY: Hard copies of the evaluate execution screens are printed out on this menu.

1. When the HARD COPY menu is clicked, the screen display is printed out.

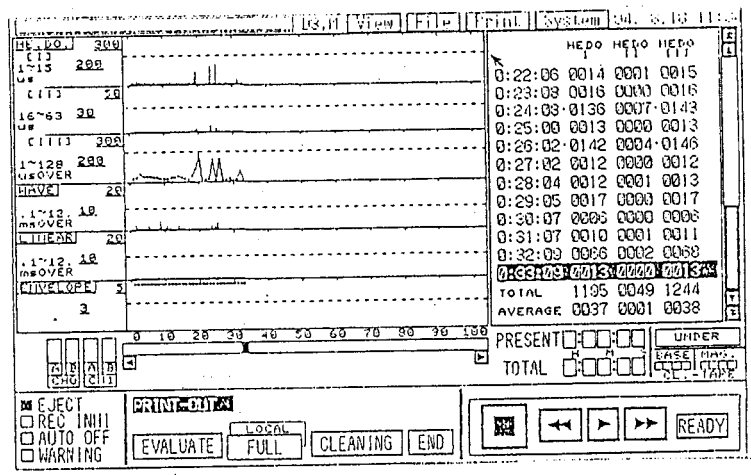

TOTAL DATA: The total data (graph data, numeric data, etc.) for one cassette tape can be printed out on this menu.

1. When the TOTAL DATA menu is clicked, the total data is printed out.
2. The total data printout shows the following details.
   - An outline of the cassette data appears in the header section. The top 20 sorted results for each data are then displayed.
   - Graphs are displayed on the basic display screen for up to 300 minutes in units of 100 minutes.
   - Numeric data is displayed in 1-minute tape length units for one tape.
   (See page 20 for details of what is displayed.)

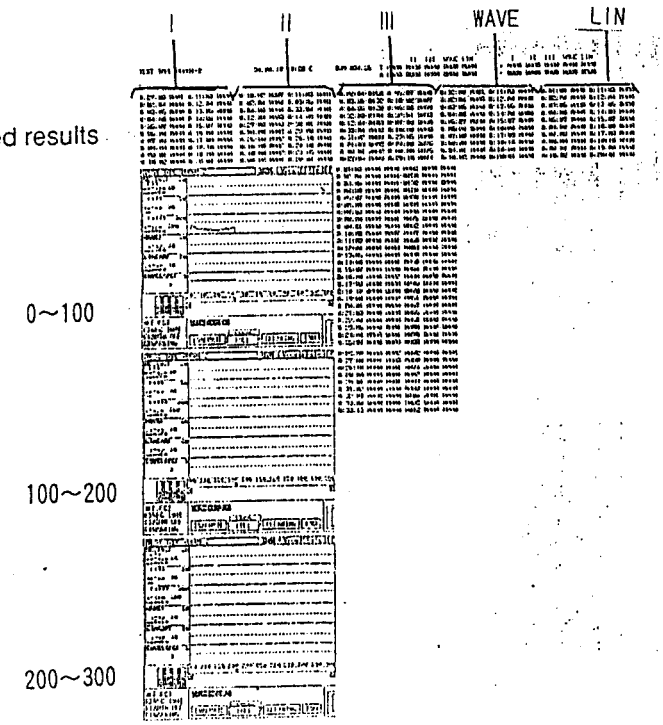

4-5. System menus

SORT ON

MODE SELECT

USER PRESET

RF AUTO SET

TEST MENU

SYSTEM QUIT

4-5-1. Selecting SORT ON/OFF

When SORT ON is clicked after evaluate execution, three types of numeric data are stored so that they will be arranged in sequence with the highest values first.

1. Starting from the left, 6 frames, 3 frames and 3 frames are displayed for the three types of data.

2. HE DO(I), HE DO(II), HE DO(III), WAVE or LIN can be selected as the type of display.
   When SORT EXECUTE is clicked, the results of sorting the data again are displayed.
   - To display other numeric data by clicking SORT ON, SORT EXECUTE must be clicked. If SORT ON is clicked with other numeric data selected, the numeric data will not be displayed correctly when SORT OFF is selected.

3. The sorted numeric data display can be moved for viewing.
   - When Δ or ∇ at the far right is clicked, the value above or below the display frame can be viewed.
   - The bar display at the far right of the display screen gives a general indication of the position of the data currently displayed among all the data.

4. When the system menu is selected and SORT OFF is clicked, the display prior to SORT ON returns to the screen.

5. SORT OFF results when EVALUATE is executed with SORT ON selected.

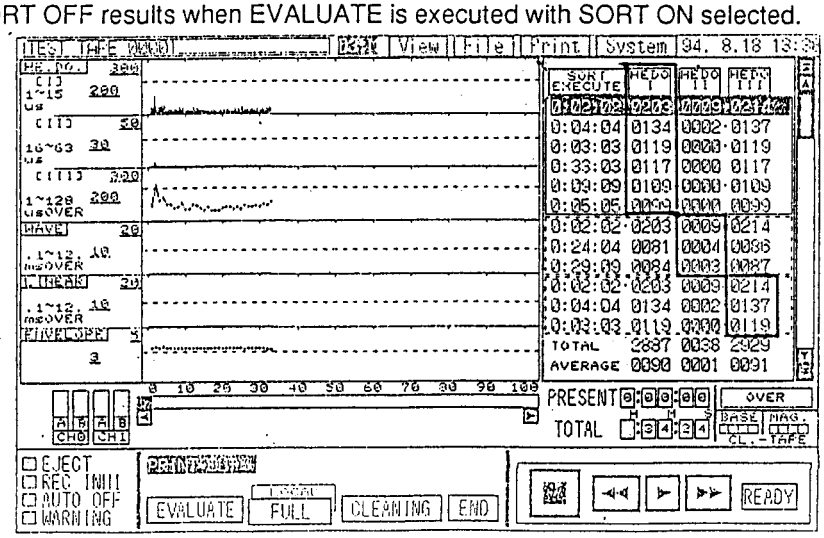

4-5-2. Selecting the USER PRESET menu

(This menu is for setting the displays on the display execution screen.)
When USER PRESET is clicked, the USER PRESET menu replaces the display on the screen.

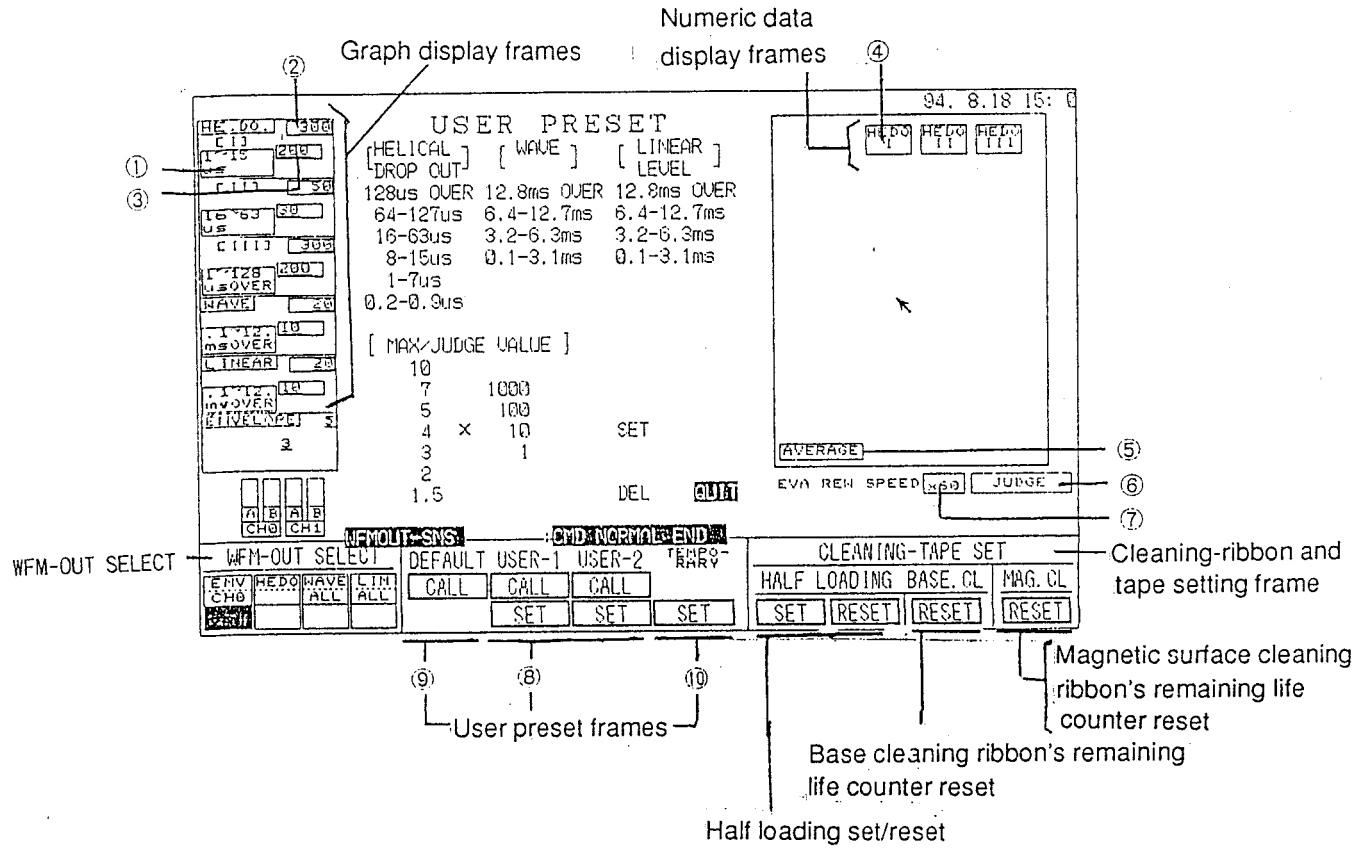

A USER PRESET setting items

(1) Graph and numeric data display frame setting items

1) Range setting for detection unit length of graph display items
2) Maximum setting of graph display
3) Judgment value setting of graph display
(displayed in red when the numeric value is exceeded)
• Priority for display on the screen is given to instant damage on the tape. For a display with a scale ratio of 50% or 33.3% selected on the view menu, this means that the number of data per display will increase and the display values will be further added. (See the view menu selections.)
4) Setting of numeric data displays
5) Setting of AVERAGE or CONVERSION display
(AVERAGE displays the data for 6 seconds of real time or one minute of tape length; CONVERSION displays the data equivalent to the helical dropout count for 60 seconds of real time.)
6) Setting of overall judgment (JUDGE) result display
7) Selection of full evaluate rewind speed (EVA REW SPEED): X60, X32, X10, X5

(2) Setting items for user setting and call of settings

8) User setting and call of USER SET-1, USER SET-2
9) Call of values determined as defaults
10) TEMPORARY: Setting of temporary settings

(3) WFM OUT SELECT setting items

11) ENV, ENV CH0, ENV CH1, RF CH0, RF CH1
12) HE DO
13) WAVE
14) LIN

(4) CLEANING-TAPE SET setting items

15) Half loading set
16) Half loading preset
17) Base cleaning ribbon counter reset
18) Magnetic surface cleaning ribbon counter reset

B USER PRESET operations

1. How to set the graph and numeric data display frames

(1)Click the block for the detection unit length of the graph display frame.
• Select one or more ranges from the block frame, and click SET.
(2)Select the maximum value for the graph display frames, and click SET.
(3)Select the judgment value for the graph display frames, and click SET.
(4)Select the type of numeric data to be displayed. (Up to 3 types can be displayed.)
(5)Select the AVERAGE or CONVERSION setting from the AVERAGE display frame.
(6)Click JUDGE in the overall judgment frame to set it to the [JUDGE] display.
• The overall judgment results will not be displayed while (JUDGE) is displayed.
(7)Select the speed at which the tape is to be rewound during full evaluation from the speed types displayed.
(8)The user settings are entered when USER[SET] is clicked.
SET can be used to set the user settings separately in USER-1 and USER-2.
(9)When QUIT is clicked, the screen returns to the original execution screen.
(10)When CALL is clicked, pre-assigned and entered data can be set.

C Selecting WAVE FORM OUT

(The detection signals can be output to the output connectors.)

1. Envelope output:
   The envelope detection output and RF envelope output signals for simultaneous playback during evaluate execution are output.
   1) Envelope detection output
   2) RF envelope output

2. Helical dropout output

3. WAVE output

4. LINEAR output

D How to replace the cleaning ribbons

How to replace the base cleaning ribbon

1. Select the system menu, and click USER PRESET.

2. In order for the base cleaning ribbon to be replaced, the half-loading status must be established. Click SET for "HALF LOADING" in the CLEANING-TAPE SET display frame.
   (Make sure that the cassette tape has been ejected.)
3. Replace the base cleaning ribbon by following the replacement procedure given below.

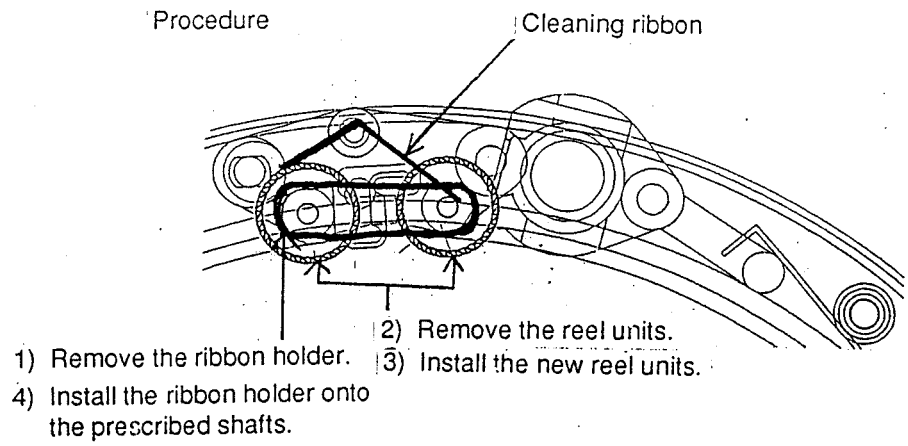

4. After the ribbon has been replaced, click RESET for HALF LOADING to release the half-loading status.

5. Click RESET for the remaining base cleaning ribbon life display to reset the display to the default value.

6. When QUIT is now clicked on the screen, operation returns to the evaluate execution screen and, at the same time, the remaining base cleaning ribbon life display on the execution screen is reset.

How to replace the magnetic surface cleaning ribbon

1. Select the system menu, and click USER PRESET.
2. Replace the magnetic (MAG) surface cleaning ribbon.
3. Replace the magnetic surface cleaning ribbon by following the replacement procedure given below.

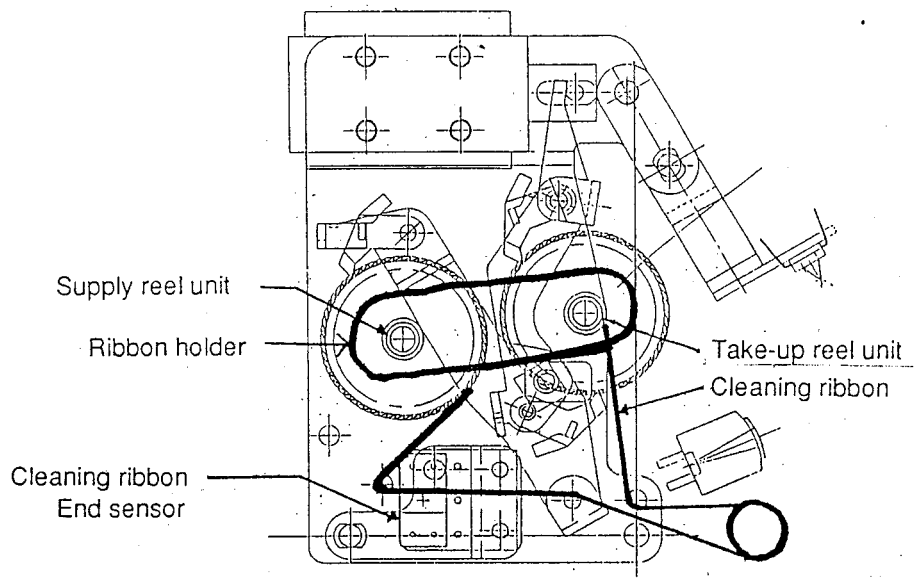

1) Remove the ribbon holder.
2) Remove the reel units.
3) Install the new reel units.
4) Install the ribbon holder onto the prescribed shafts.

4. After the ribbon has been replaced, click RESET for the remaining magnetic surface cleaning ribbon life display to reset the display to the default value.
5. When QUIT is now clicked on the screen, operation returns to the evaluate execution screen and, at the same time, the remaining magnetic surface cleaning ribbon life display is reset.

4-5-3. Selecting the MODE SELECT menu

```
                    MODE SELECT
TAPE EJECT :   AUTO   MANUAL

TAPE-DATA TIME FORMAT      :
               XXX:XX  X:XX:XX

TAPE NAME USABLE CHARACTER :
               0-9,A-Z   a-z   A-Z   KANA
               OTHER     _./<>()"'-=

DIRECTORY  :   B:\EVADATA1

QUIT
```

1. Assigning a directory containing data
   - Directories containing data can be assigned.
   (1) Enter the disk drive assignment and directory name in MS-DOS.
      1) Enter and set the disk drive assignment and directory name in MS-DOS first.
         Example:
         To assign "B" for the disk drive and to name the directory " \EVADATA1" , the directory is set in MD-DOS using the following command:

         B:\ ) MD EVADATA 1 ↵

      2) After this setting, start up the evaluator system. (See 2 in section 2-2.)

   (2) On the MODE SELECT menu assign the disk drive and directory into which data is stored.
      1) When the .\ area of DIRECTORY is clicked with the mouse, it is highlighted.
         For instance, when B:\EVADATA1 is keyed in and the return key on the personal computer is pressed, the directory is called.
         If the directory name already exists in MS-DOS, the highlighting is released, and the entered directory name is displayed.
      2) When QUIT is clicked, operation returns to the execution screen.
         Assign one disk drive for running the evaluator program software anf another disk drive for storing the data. (See section 4-5-3.)

   (3) Data equivalent fo eighteen D-3 90-minute tapes can be stored on a single floppy disk.

2. Once a directory is set to be called, the directory name most recently assigned will be automatically set up to be accessed when the personal computer is started up.
   - Install the system disk for execution in the personal computer.
   - Do not file too much data in the directory since this will increase the time taken for retrieval.
   It is recommended that data be saved at regular intervals.

3. TAPE NAME USABLE CHARACTER
   The alphanumerics to be assigned in the tape name frame can be selected and assigned here. The highlighted alphanumerics and symbols can be assigned.

4. TAPE EJECT: AUTO MANUAL
   Manual or auto can be selected here for tape ejection. When full evaluate is executed in the AUTO mode, the tape can be automatically ejected when the evaluation is completed.

5. TAPE-DATA TIME FORMAT
   The display format used for the tape data time can be selected here. Hours or minutes can be selected.

6. When QUIT is clicked, operation returns to the original screen.

4-5-4. Selecting the RF AUTO SETUP menu

This menu is for automatically adjusting the RF recording current so that it is optimized.

1. When the RF AUTO SETUP menu is clicked, the RF AUTO SETUP screen appears.

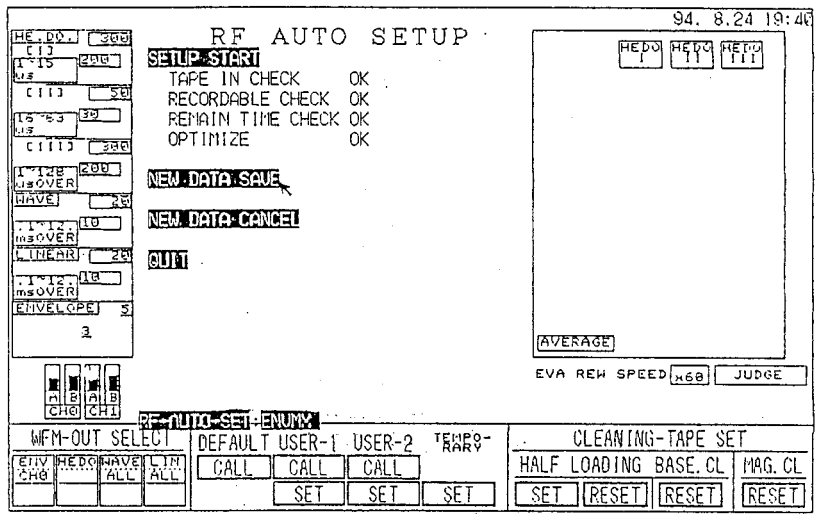

2. Install the cassette tape for which the RF recording current is to be adjusted.
   When the tape is wound to its start, RF auto setup cannot be executed since the remaining tape amount cannot be calculated. Keep feeding the tape in the fast forward direction until the total time display appears on the evaluate execution screen.

3. Click SETUP START.
   When this is clicked, the RF recording current adjustment commences automatically.
   • Whether the following items are acceptable (OK) or unacceptable (NG) is now determined.

   • TAPE IN CHECK (cassette tape installed/not installed check)

   OK or NG: TAPE EJECT

   • RECORDABLE CHECK (REC INHIBIT check)

   OK or NG: REC INHIBIT

   • REMAIN TIME CHECK (remaining tape amount check)

   OK or NG: **min.LESS

   If the results for these three checks are all "OK," the tape is automatically rewound to its start and optimization (automatic adjustment) commences from the beginning.

4. During optimization, the following display appears:

   CHECKING ..... PRESENT TIME/TOTAL TIME
   P(present position time) / T (total time)

   At the same time, the adjustment status is monitored by the head playback output signal of each channel.
   • To suspend operation at any time, click QUIT or press the personal computer's space key.

5. When the adjustment is completed, enter and set the new adjustment value.

   Click SAVE on the NEW DATA SAVE line to save the newly adjusted setting; click CANCEL on the NEW DATA CANCEL line to cancel.

6. Upon completion of RF AUTO SETUP, click QUIT. Operation now returns to the evaluate execution screen.
   - No operations are possible outside the RF AUTO SETUP display frame.
   - Depending on the position of the markers, the display may vanish from view. However, this will not affect operation.

When the AUTO SETUP adjustment attempt is not successful

(1) When the adjustment is not completed within the allotted time:
   - There is a problem with the tape used.
   - There is a problem with the heads.

(2) When there is an extremely large difference in the envelope levels during evaluation:
   - There is a problem with the heads or their service life is over.

(3) When operation stops midway through the adjustment:
   - The heads are clogged.

4-5-5. Selecting the TEST menu

(1) Select the TEST MENU.
[OPERATION TIME] and [SOFTWARE VERSION] appear.

```
                    TEST MENU

[ OPERATION TIME ]
    OPERATION      :     53 HOURS
    HEAD ROTATION  :     10 HOURS
    TAPE TRAVEL    :     10 HOURS
    THREADING      :    143 TIMES

[ SOFTWARE VERSION ]
    SYSCON : N115
    EVA    : N100
    SERVO  : N012
    CUE    : N101

          QUIT
```

"OPERATION" denotes the number of hours for which the deck's power has been on, "HEAD ROTATION" the number of hours for which the drum has rotated, "TAPE TRAVEL" the number of hours for which the tape has traveled, and "THREADING" the number of times a cassette tape has been loaded.
The software versions are also displayed.

4-5-6. Selecting the SYSTEM QUIT menu

When the SYSTEM QUIT menu is clicked, the system is exited.

Chapter 5 Inspections

5-1. Cleaning the cylinder and transport system

It is recommended that these areas be cleaned once a day. Follow the same procedure as for cleaning the drum and transport system in a D-3 or D-5 VTR. (Refer to ADJUSTMENT PROCEDURES - CLEANING PROCEDURES in the Service Manual.)

5-2. Replacing the cleaning ribbons

Use the remaining cleaning ribbon life displays on the execution screen as a reference, check visually the remaining life of the ribbons at the same time when the cylinder is cleaned every day and, when necessary, replace the ribbons at an early date. (See pages 29, 31 and 32.)

5-3. Checking RF AUTO SETUP

Proceed with the AUTO SETUP of the RF recording current as and when appropriate. As a general guideline, proceed with every 300 to 500 tapes or, alternatively, proceed when the head output levels of certain channels or the overall head output levels differ greatly on an envelope level monitor.

Circuit board	Description
EVS8	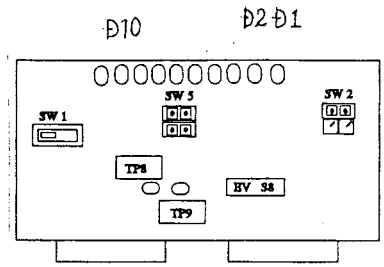 D1 lights when helical dropouts have occurred. D2 lights when fluctuations in the linear level have been detected. D10 lights when the RF envelope level has dropped. TP8 is for the CH0HSW signal. TP9 is for the CH1HSW signal. SW5 CH1 (closed) CH0 (closed) • Normally, both the top and bottom DIP switches are set to closed. CH1 (open) CH0 (closed) Dropouts are counted for CH0 only. CH1 (open) CH0 (closed) Dropouts are counted for CH1 only. SW1 • This is normally set to the 27.7 MHz position. It is used to select the RF single signal recording frequency. 27.7 MHz SW2 Fixed as shown above.
EVS9	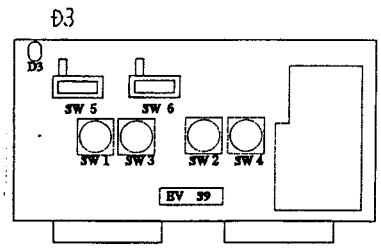 D3 lights when WAVE has been detected. SW1 SW2 SW3 SW4 SW1, 2, 3 and 4 are all set simultaneously to 0, 1, 2, 3 .... F. SW1, 3, 2, 4 0 —— 1 2 3 * Factory setting: 1
EVS5	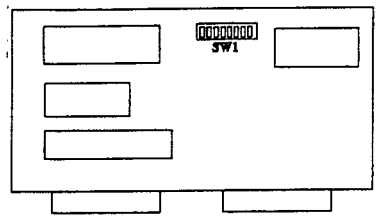 Normal positions as shown above.

Chapter 7 Error messages

If an error occurs, a number will appear on the personal computer's screen to alert the operator.

: DECK ERR NO.38

Error No.	Cause	Check point
26	Undefined command has been received during RS-232C communication.	• Check receive command.
27	Sum check error has occurred in receive command during RS-232C communication.	• Check receive command.
28	Parity error has occurred in receive command during RS-232C communication.	• Check receive command.
29	Framing error has occurred in receive command during RS-232C communication.	• Check receive command.
30	Overrun error has occurred in receive command during RS-232C communication.	• Check receive command.
31	Time-out error has occurred in receive command during RS-232C communication.	• Check receive command.
37	Cooling fan has stopped.	• Suspend all further use if VTR until remedial action has been taken.
38	Cassette fails to move up even when 5 seconds have elapsed after operation transfer to cassette move-up.	• Motor stops operating.
39	Sub unloading operation is not completed within 10 sec.	• Motor stops operating.
40	Main unloading operation is not completed within 10 sec.	• Motor stops operating.
41	Start/end-of-tape detection LED obstruction or malfunction has been detected.	• In READY OFF mode stops operating and VTR is set to STOP mode.

Error No.	Cause	Check point
42	Condensation has formed inside VTR.	• Cassette is ejected. Leave as is without turning off the power. The cylinder will rotate and dry out the condensation. Once the condensation has gone, the display turns off and normal operation can be resumed.
43	Cylinder rotation fails to reach rating or it exceeds rating for more than 5 seconds.	• Motor stops operating.
44	Trouble with capstan rotation has continued for more than 2 seconds.	• Motor stops operating.
44A	Trouble with reel rotation has occurred.	• Motor stops operating.
45	Trouble has occurred in tape tension and this has continued for more than 1 second.	• Motor stops operating.
46	Trouble with tape tension in shuttle (reel mode) has continued for more than 3 seconds.	• Motor stops operating.
46A	Trouble has occurred in rotational status of both reels in shuttle mode.	• Motor stops operating.
47	Rotation of take-up reel and supply reel in reverse direction contined for half a full turn.	• Motor stops operating.
48	Take-up reel has not rotated while the tape ran for 1.6" (4 cm) in the capstan mode.	• Motor stops operating.
49	Trouble in communication between CPUs.	• Motor stops operating.
50	Supply reel motor has not operated.	• Motor stops operating.
51	Take-up reel motor has not operated.	• Motor stops operating.
52	A state in which system control is ignored and assigned speed is not reached has continued for mode than 10 seconds.	• Motor stops operating.

Chapter 8 Specifications

Power requirements:	AC 100-120V, 50 - 60 Hz
Power consumption:	200W

▭ is the safety information.

General specifications

Tape speed:	838.8 mm/s
Cassette tape:	1/2" digital D-3 or D-5 format cassette tape
Ambient operating humidity:	10% to 80%
Ambient operating temperature:	41° F TO 104° F (5°C to 40°C) (no condensation)
External dimensions:	17-3/16" (W) x 6-15/16" (H) x 21-11/16" (D) 436(W) x 176(H) x 550(D) mm
Weight:	59.4 lbs (27 kg)

Product specifications

Evaluation speed:	x10 normal tape speed for D-3 tapes (equivalent to x5 for D-5 tapes)
Evaluation time:	Approx. 12 min. for 90-minute tape (D-3)
Cleaning mode speed:	x10 normal tape speed for D-3 tapes (equivalent to x5 for D-5 tapes)
Cleaning time:	Approx. 12 min. for 90-minute tape (D-3)
WFM output connector:	BNC x1 ENV(CH0/1)/RF(CH0/1)/WAVE/LINEAR (selectable)
Remote signal connector:	RS-232C D-Sub 25P x1

Evaluation detection system

Helical tracks:	Dropout detection with recording and simultaneous playback
Tape edges:	Detection of changes in light using top and bottom edge photo-sensors
Cue, TC tracks:	Detection of fluctuations in level by recording and simultaneous playback

Evaluation detection signals

Dropout detection	
• Recording frequency:	27.7 MHz
• Detection level:	-8 dB
• Dropout length:	0.2 to 128μs or more
• Screen displays:	3 types
Waviness detection	
Fluctuation detection level:	3 levels, selectable
• Waviness fluctuation length:	0.1 to 12.8ms or more
• Screen display:	1 type
Linear detection	
• Recording & simultaneous playback frequency:	10 kHz
• Detection level:	-6 dB
• Linear level fluctuation length:	0.1 to 12.8ms or more
• Screen display:	1 type
Tape time	
• Accuracy:	Within ±15 sec (90-minute tape) (with full evaluation)

Tape cleaning system

Paper ribbon feed cleaner
Separate cleaning for base and magnetic surface

The evaluator treats D-5 tapes as D-3 tapes for cleaning.

Accessories

- Operating instruction manual
- Floppy disk for executing evaluation and cleaning
- Power cable

Weight and dimensions shown are approximate.
Specifications are subject to change without notice.